24.01 SSP Vetoniitti kupupanta, teräs-teräs

SEND THE INQUIRY

+358 103 195 100

Standards:

ISO 15979

Pinnoite tyyppi:

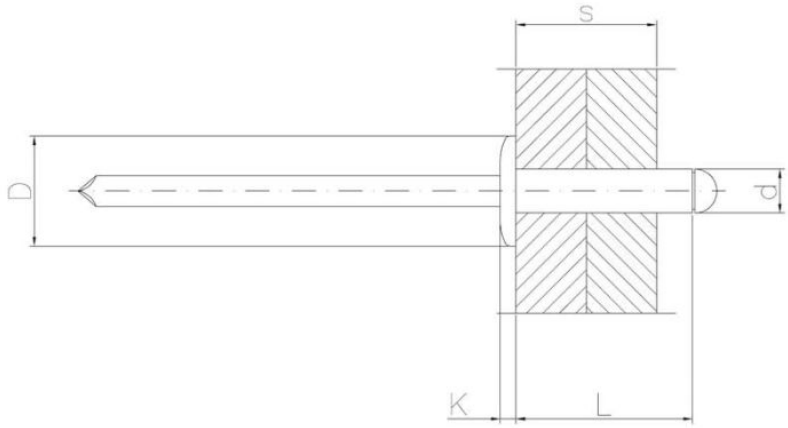

Dimensions

Material index	d [mm]	L [mm]	D [mm]	s [mm]	k [mm]
2401030060SST	3.0	6	6.5	1.5-3.5	0.8
2401030080SST	3.0	8	6.5	3.5-5.5	0.8
2401030100SST	3.0	10	6.5	5.5-7.0	0.8
2401030120SST	3.0	12	6.5	7.0-9.0	0.8
2401032060SST	3.2	6	6.5	1.5-3.5	0.8
2401032080SST	3.2	8	6.5	3.5-5.5	0.8
2401032100SST	3.2	10	6.5	5.5-7.0	0.8
2401032120SST	3.2	12	6.5	7.0-9.0	0.8
2401040060SST	4.0	6	8.0	1.5-3.0	1.0
2401040080SST	4.0	8	8.0	3.0-5.0	1.0
2401040100SST	4.0	10	8.0	5.0-6.5	1.0
2401040120SST	4.0	12	8.0	6.5-8.5	1.0
2401040140SST	4.0	14	8.0	8.5-10.5	1.0
2401040160SST	4.0	16	8.0	10.5-12.5	1.0
2401040180SST	4.0	18	8.0	12.5-14.5	1.0
2401040200SST	4.0	20	8.0	14.5-16.5	1.0

Material index	d [mm]	L [mm]	D [mm]	s [mm]	k [mm]
2401048060SST	4.8	6	9.5	0.5-3.0	1.1
2401048080SST	4.8	8	9.5	3.0-4.5	1.1
2401048100SST	4.8	10	9.5	4.5-6.0	1.1
2401048120SST	4.8	12	9.5	6.0-8.0	1.1
2401048140SST	4.8	14	9.5	8.0-10.0	1.1
2401048160SST	4.8	16	4.8	10.0-12.0	1.1
2401048180SST	4.8	18	9.5	12.0-14.0	1.1
2401048200SST	4.8	20	9.5	12.0-15.0	1.1
2401048210SST	4.8	21	9.5	14.0-16.0	1.1
2401048240SST	4.8	24	9.5	16.0-19.0	1.1
2401048300SST	4.8	30	9.5	20.0-25.0	1.1
2401048350SST	4.8	35	9.5	25.0-30.0	1.1
2401050080SST	5.0	8	9.5	3.0-4.5	1.1
2401050100SST	5.0	10	9.5	4.5-6.0	1.1
2401050120SST	5.0	12	9.5	6.0-8.0	1.1
2401050140SST	5.0	14	9.5	8.0-10.0	1.1
2401050160SST	5.0	16	9.5	10.0-11.5	1.1
2401050180SST	5.0	18	9.5	12.0-14.0	1.1
2401050200SST	5.0	20	9.5	13.0-15.0	1.1
2401050250SST	5.0	25	9.5	16.0-21.0	1.1
2401050300SST	5.0	30	9.5	21.0-25.0	1.1
2401060100SST	6.0	10	12.0	3.0-4.5	1.5
2401060120SST	6.0	12	12.0	4.5-6.0	1.5
2401060160SST	6.0	16	12.0	8.5-12.0	1.5
2401060180SST	6.0	18	12.0	10.5-12.5	1.5
2401060300SST	6.0	30	12.0	19.0-25.0	1.5
2401064120SST	6.4	12	13.0	2.0-6.0	1.8
2401064150SST	6.4	15	13.0	6.0-9.0	1.8
2401064180SST	6.4	18	13.0	9.0-12.0	1.8
2401064200SST	6.4	20	13.0	12.0-14.0	1.8
2401064250SST	6.4	25	13.0	13.0-19.0	1.8
2401064300SST	6.4	30	13.0	19.0-24.0	1.8